824 - 894 MHz Window Antenna

Operating Frequency: 824-894 MHz
Product code: PANL-A0040

PANL-A0040 is a directional antenna for indoor or outdoor use. It is equipped with a universal ball bracket for easy azimuth and elevation adjustment and can be mounted on either the interior of a window or on an exterior wall. The antenna is provided with a 5m cable with TNC (male) connector for fitment to devices using the TNC (female) connector.

Features:

5dBi 824 – 894MHz antenna
Easily adjustable ball mounting bracket
Suction pads for window mounting

Application areas:

This product provides superior signal for Neotel products.

Specifications:

Product Code:

PANL-A0040 5dBi 824-894MHz with 5m Low loss cable with TNC(m) connector

Electrical specifications

Frequency	824–894 MHz
Gain (max)*	5.8 dBi (+-0.5 dB)
Gain (min over the band)*	5.0 dBi (+-0.5 dB)
VSWR	2:1 (typ) 2.3:1 (max)
Elevation 3 dB beamwidth	62° (± 4°)
Azimuth 3 dB beamwidth	84° (± 4°)
Feed power handling	6 W
Nominal input impedance	50 Ohm
Polarisation	Linear (Vertical or Horizontal)

Electrical compliance

Sidelobes level	ETSI EN 302326-03 v1.2.2 DN2

Materials compliance RoHS

Environmental:

Flammability	UL 94 Class HB
Wind operation	<120 km/h
Temperature Range	- 40°C to +70°C
Mechanical Shock	ETSI 300 019-2-4 V2.2.2 T4.1E
Vibration	ETSI 300 019-2-4 V2.2.2 T4.1E
Solar radiation	IEC 68-2-5, MIL-STD-810
Humidity	95% condensation, (IEC 60068)
Water Ingress Rating	IP65 (NEMA 4X)
Salt spray	ETSI 300 019-2-4

Mechanical:

Package dimensions	350mm x 200mm x 80mm
Packaged weight	0.90 kg
Deployed dimensions	360mm x 185mm x 150mm
Colour	Pantone Cool Grey 1C
Mounting	Ball-jointed bracket for wall or window mounting

* Gain data includes the loss in the 5m low-loss cable

VSWR and Gain

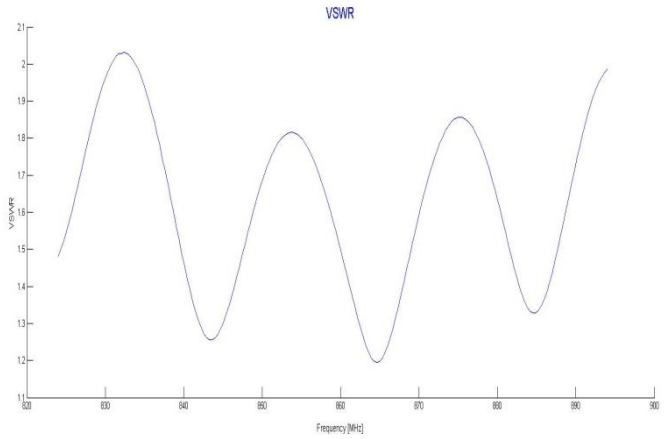

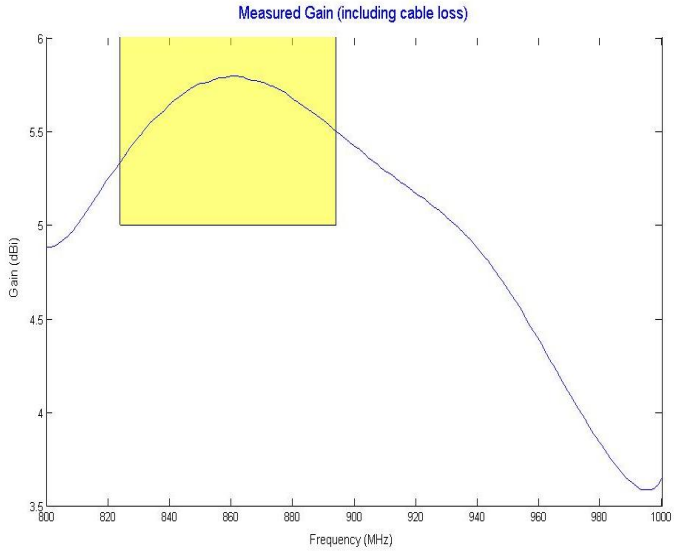

Co-polar Radiation Patterns

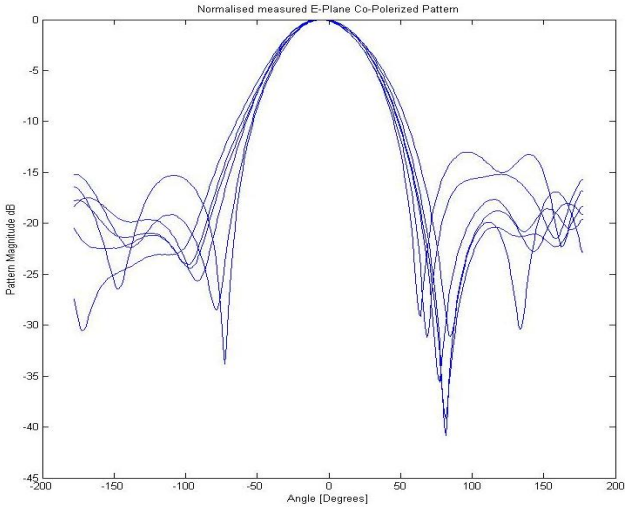

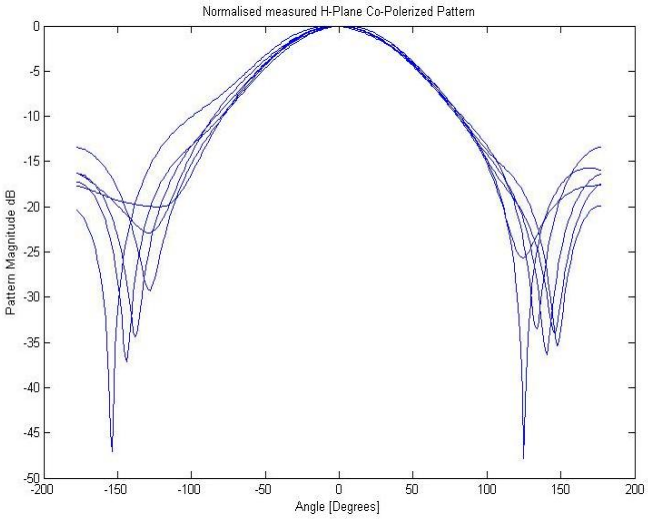

Mechanical Drawings

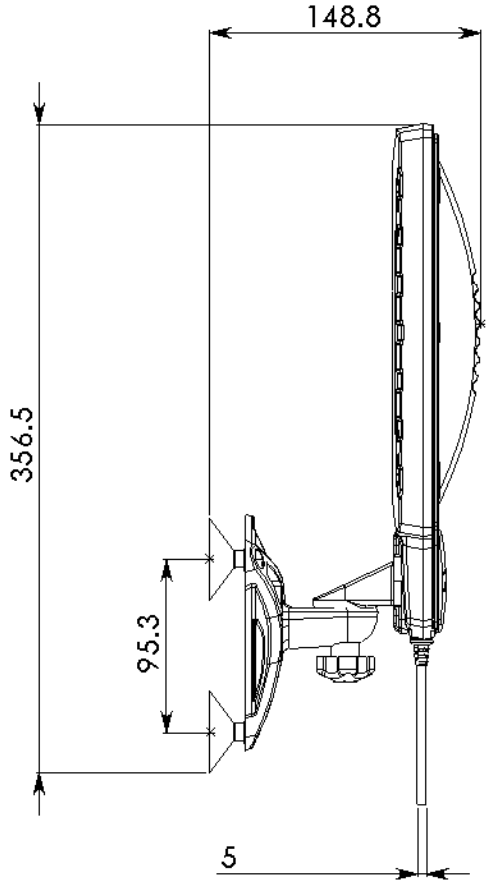

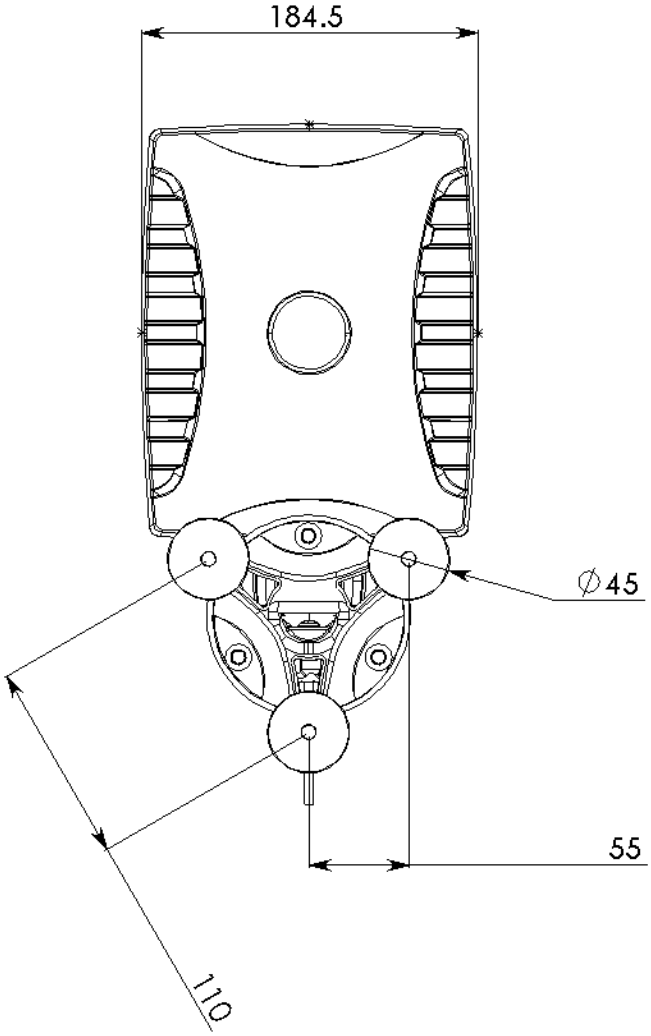

All dimensions in mm